BRUMA · INSTALLATION DRAWING

PLAN AND SECTION

Dimensions in mm unless noted.
Drawings not to scale.

TOP VIEW

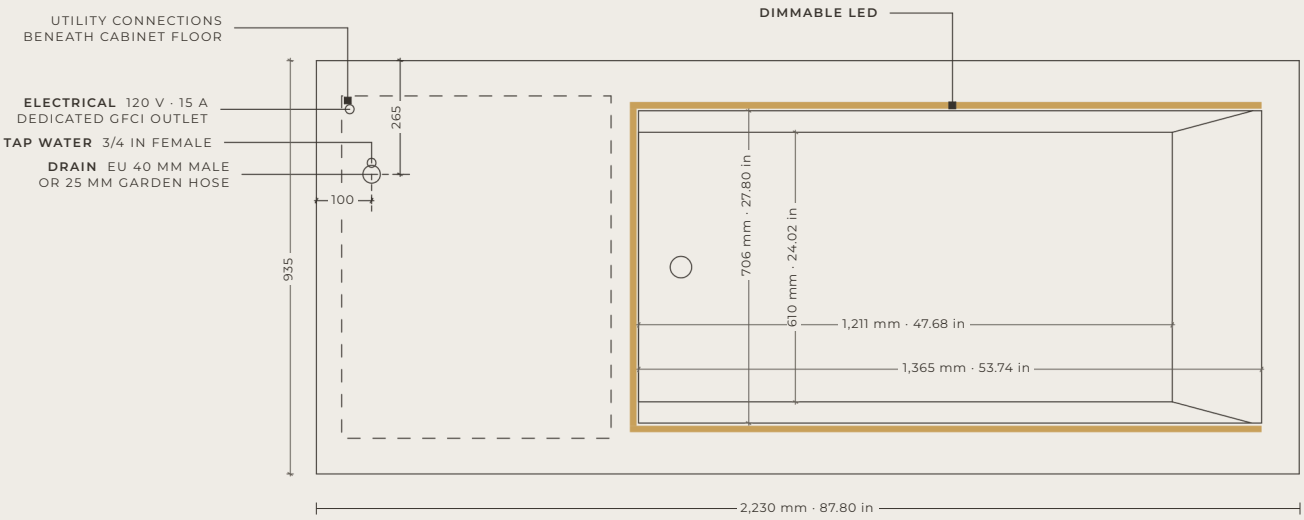

SECTION

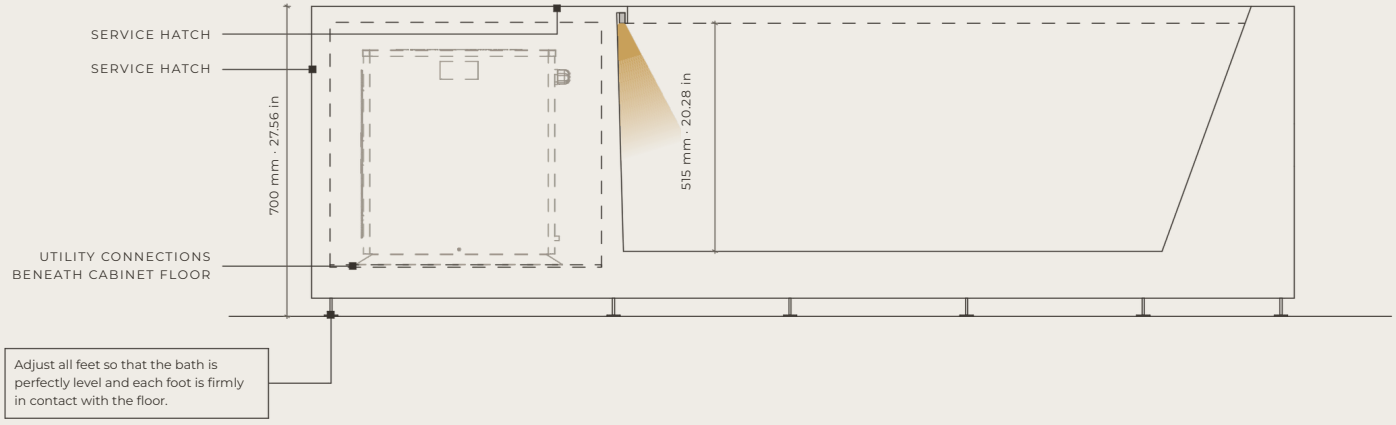

DIMENSIONS L × W × H	WATER VOLUME	NET WEIGHT
87.80 × 38.27 × 27.56 in	95 gal	595–660 lb
Approx. 2,230 × 972 × 700 mm	Approx. 360 L	Approx. 270–299 kg

BRUMA · INSTALLATION DRAWING

EQUIPMENT AND SITE REQUIREMENTS

3D SCHEME

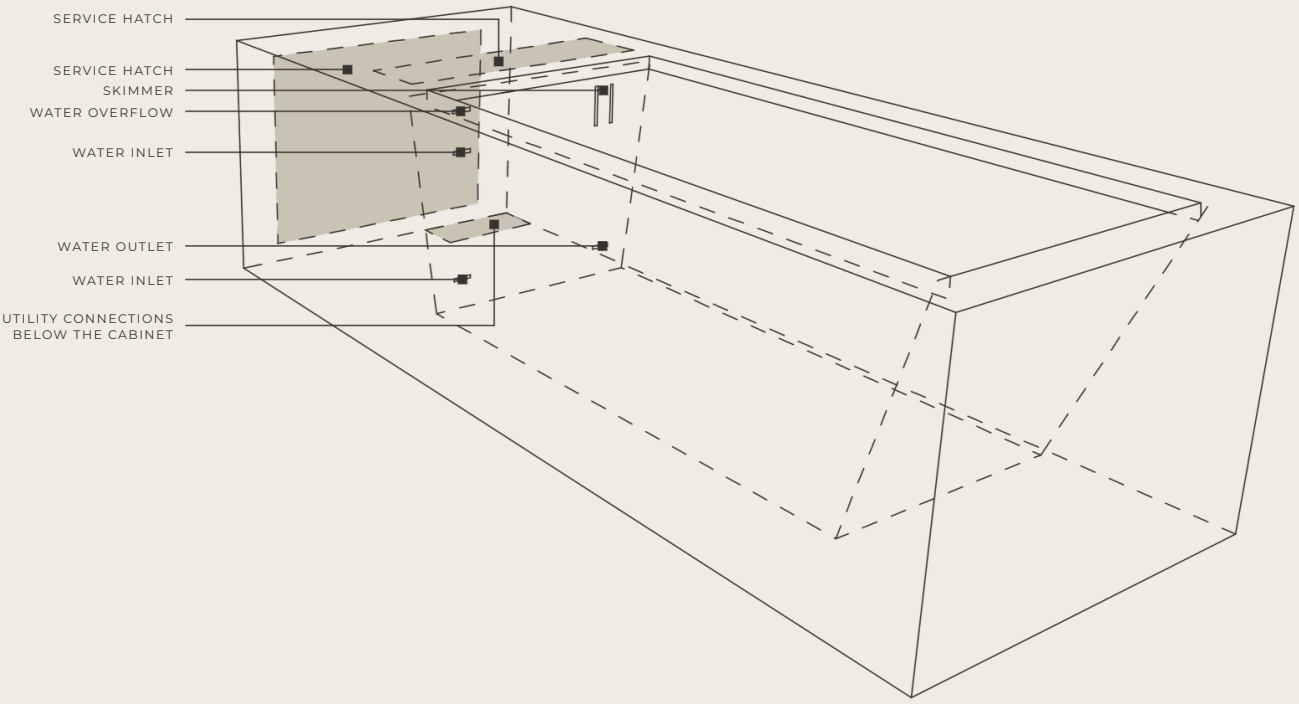

INDOOR INSTALLATION

01 Provide forced ventilation of 295 CFM.

02 Keep a minimum of 2 ft of free space in front of the fan.

03 Raise the equipment cabinet at least 1.5 in above the floor to ensure proper ventilation.

OUTDOOR INSTALLATION

01 Keep a minimum of 2 ft of free space in front of the fan.

02 Raise the equipment cabinet at least 1.5 in above the floor to ensure proper ventilation.

03 When used as a cold plunge, install the bath in the shade to protect it from direct sunlight.

CLIENT RESPONSIBILITY · SITE PRE-WORKS

01 Drain connection to an EU 40 mm female pipe, or a 3/4 in garden hose connection. Overflow is connected to the drain.

02 120 V, 15 A dedicated GFCI outlet.

03 Tap water connection, 3/4 in female (optional).

LEVELING

Adjust all feet so that the bath is perfectly level and each foot is firmly in contact with the floor. Keep the service hatches accessible after installation.

OFFICE

33 E 33rd Street, RM 402
New York, NY 10016, United States

CONTACT

info@prestigewellness.us
+1 917 671 0300